PLAST-O-MATIC®

PRODUCT DATA

VARIABLE AREA FLOW INDICATORS

SERIES FIG/FIGS

Plast-O-Matic flow gauges indicate liquid flow rates from low flows of 0-1 GPM to 0-10 GPM, even when used at high line pressures. Flow gauge sensors can be supplied with switches or relays to initiate alarms, activate other equipment, or shut the system down. Two switches are used when high and low limits are desired. Maximum line pressure rating is 200 PSI.

VARIABLE AREA FLOW INDICATORS

Series FIG: Variable Area Flow Indicator Gauge, 2.5" Dial

Series FIGS: Variable Area Flow Indicator Gauge/Switch, 2.5" Dial

- Quantitative readout of variable area flow
- 1/4" or 1/2" FNPT Connections
- Accuracy is ±5% FS
- Corrosion-resistant thermoplastic connections; PVC or CPVC
- EPDM or FKM elastomers
- No wetted metal parts.
- Made in USA

Connection Size	Gauge Range GPM	Gauge Size	Switch	PVC Model Number
1/4"	0-1	2.5"	None	FIG025V-PV-2.5-1
1/4"	0-2	2.5"	None	FIG025V-PV-2.5-2
1/4"	0-1	2.5"	SPST - Normally Open	FIGS025V-PV-2.5-A-1
1/4"	0-1	2.5"	SPST - Normally Closed	FIGS025V-PV-2.5-B-1
1/4"	0-1	2.5"	SPDT	FIGS025V-PV-2.5-C-1
1/4"	0-2	2.5"	SPST - Normally Open	FIGS025V-PV-2.5-A-2
1/4"	0-2	2.5"	SPST - Normally Closed	FIGS025V-PV-2.5-B-2
1/4"	0-2	2.5"	SPDT	FIGS025V-PV-2.5-C-2
1/2"	0-5	2.5"	None	FIG050V-PV-2.5-5
1/2"	0-10	2.5"	None	FIG050V-PV-2.5-10
1/2"	0-5	2.5"	SPST - Normally Open	FIGS050V-PV-2.5-A-5
1/2"	0-5	2.5"	SPST - Normally Closed	FIGS050V-PV-2.5-B-5
1/2"	0-5	2.5"	SPDT	FIGS050V-PV-2.5-C-5
1/2"	0-10	2.5"	SPST - Normally Open	FIGS050V-PV-2.5-A-10
1/2"	0-10	2.5"	SPST - Normally Closed	FIGS050V-PV-2.5-B-10
1/2"	0-10	2.5"	SPDT	FIGS050V-PV-2.5-C-10

FIG025 / FIGS025

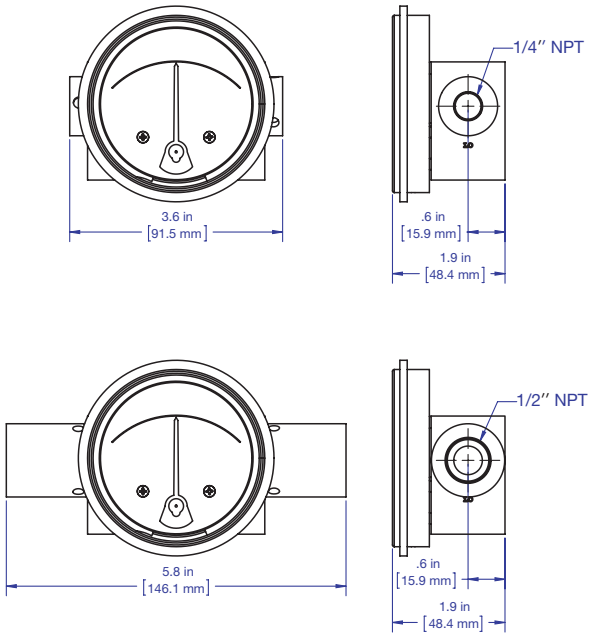

Notes – Body and Seal Materials: All part numbers shown are PVC bodies with FKM (Viton) seals. For CPVC bodies, change "-PV" to "-CP". For EPDM seals, change first "V" to "EP". For example, FIG025**V** - becomes FIG025**EP**.
Switch rating is 125V AC, 0.7 amps.

Photos are representative. Appearance may vary based on size/materials.

FIG-0415-C-1

1384 Pompton Avenue, Cedar Grove, NJ 07009 USA (973) 256-3000 • Fax (973) 256-4745 • www.plastomatic.com